HTR-HB

ROTARY ENCODER
HOLLOW SHAFT

- Light Dity
- Hollow Shaft Diameter 6, 8, 10 mm
- Mounting PCD 53.5
- Push Pull, Line Driver
- DC 5~26V

DIMENSION

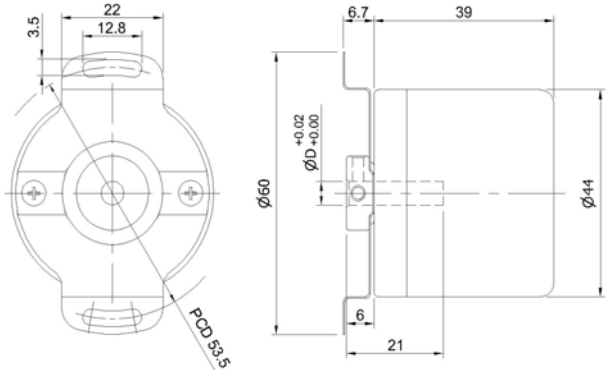

ORDERING INFORMATION

HTR-HB - [ ] - [ ] **A** - [ ]

Hole Size	*Pulse/Revolution*	*Electronics*
6: Ø6 **8**: Ø8 **10**: Ø10	**5**, **10**, **50**, **100**, **200**, **300**, **360**, **400**, **500**, **600**, **900**, **1000**, **1024**, **1200**, **1500**, **1800**, **2000**, **2048**, **2500**	**P**: Push Pull *__H__: Line Driver

ELECTRICAL SPEC.

Detection System	Incremental
Output Wave	Square Wave
Standard Number of Pulse Per Revolution	5, 10, 50, 100, 200, 300, 360, 400, 500, 600, 900, 1000, 1024, 1200, 1500, 1800, 2000, 2048, 2500
Output Phase	ABZ phase
Electronics	Push Pull, Line Driver
Power Supply	DC 5~26V
Current Consumption	≤ 60 mA
Output Capacity	Sync. Current: 20 mA, Residual Voltage: 0.5V or less
Max. Response	10K Hz ~ 150K Hz
Phase Different	A, B phase different 90°±45° (T/4±T/8), Z phase T±T/2
Wave Form Rise / Fall	2 μs or less
Polarity	Against Reverse Protection

MECHANICAL SPEC.

Hollow Shaft Diameter	6, 8, 10 mm
Shaft Loading	(5 ~ 1024 PPR) Axial: 1 Kg, Radial: 2 Kg (over 1024 PPR) Axial: 0.5 Kg, Radial: 1 Kg
Starting Torque (at 25°C)	30 gf-cm or less
Max. Speed	6,000 rpm
Vibration	Max. 10g (10±1,500 Hz)
Shock	20g per 11 ms
Cable	Ø4.5, 1000 mm long
Weight	≤ 200g

ENVIRONMENTAL SPEC.

Operating Temp. / Humidity	0°C ~ 60°C, RH 35% ~ 90% (No Condensation)
Storage Temp.	-20°C ~ 70°C
Protection	IP50: Dust Proof